Flywheel-type Auger Attachment

Applicable to extremely hard ground with SPT-N value over 600 (Boulder・Moderately Decomposed Rock or Greater)

- Generating greater inertial torque by utilizing the moment of inertia in rotational motion
- More efficient torque transmission by increasing strength on auger screw and casing with larger shaft diameter and thicker frame
- Adopting the new auger head and bit developed for high-torque performance with higher wear-resistance and load-resistance
- Reducing the load on the hydraulic hoses by preventing auger operation from sudden stopping with greater inertial torque

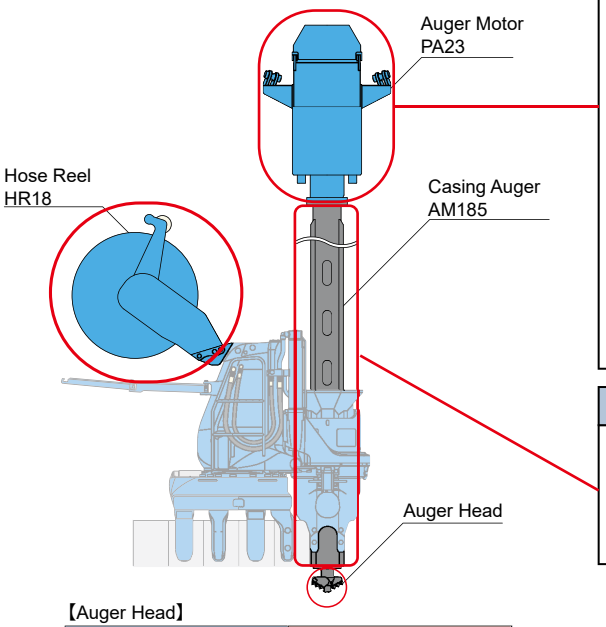

New Model (PA23)

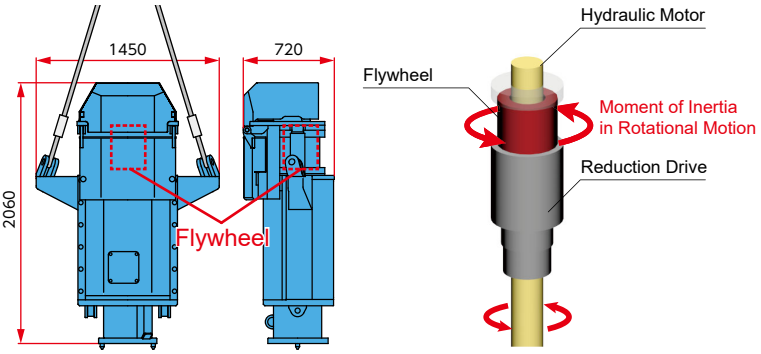

New Model (AM185)	Conventional Model (AM122N)
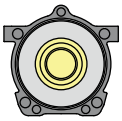 Strength on Casing : X 1.2 Strength on Screw : X 2.0	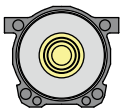

【Auger Head】

New Model	Conventional Model

4 different types of auger heads are available.
D330 Twin Blades / D450 Twin Blades / D450 Triple Blades / D540 Triple Blades

【Outer Bit】

New Model (AM185)	Conventional Model (AM122N)

【Pilot Bit】

New Model (AM185)

Auger Motor			New Model (PA23)	Conventional Model (PA22)
Applicable sheet piles			U sheet pile : 400 mm-width (Ⅱ,Ⅲ,Ⅳ, etc.)	U sheet pile : 400 mm-width (Ⅱ,Ⅲ,Ⅳ, etc.)
Drive Device	Torque	Low Speed	48 kN・m	40 kN・m
		High Speed*	-	28 kN・m
	Rotation Speed	Low Speed	10-30 min^{-1}	10-30 min^{-1}
		High Speed*	-	40 min^{-1}
	Maximum Inertial Torque		90 kN・m	-
Mass			2000 kg	1850 kg

Casing Auger		New Model (AM185)	Conventional Model (AM122N)
Casing	Outer diameter	324 mm	319 mm
Auger Screw	Shaft diameter	169 mm	146 mm
Standard (for 24 m)	Total Mass Including Auger Moter	13150 kg	10900 kg
With optional items (for 30 m)	Total Mass Including Auger Moter	15550 kg	12800 kg

*No rotational speed change due to design changes on hydraulic circuit which is unique to the flywheel-mechanism.

Verification Test 1 [The test result of automatic operation on bedrock]

Bedrock Layer
Unconfined Compressive Strength (UCS) = 24 to 35 N/mm²(MPa)
Sandstone

●Conventional Models (Red) :
Press-in force 250 kN Rotational Torque 30 kN・m
Augering stopped due to the bit wear at 10 m depth.
*Necessary to replace the bits

●New Models (blue) :
Press-in force 300 kN Rotational Torque 40 kN・m
Augering for 37.4 minutes on average
*Unnecessary to replace the bits

The new model is capable of penetrating deeper and faster with heavier load than conventional model.

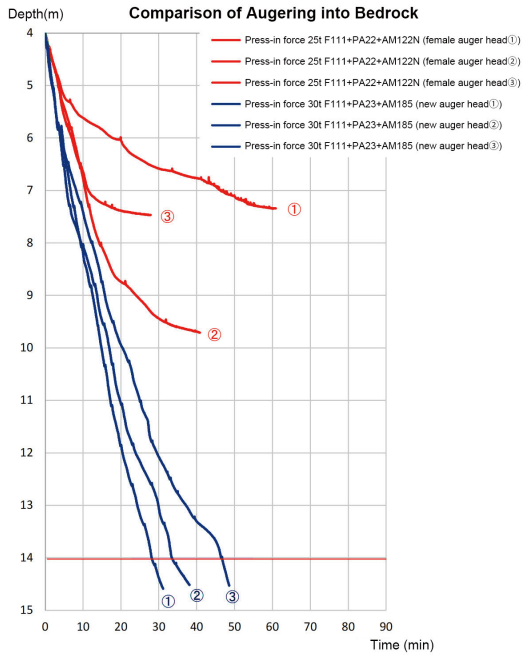

Test Field

Verification Test 2 [The comparison with a conventional model in cobble layer]

Ground Condition：Cobble layer (Max. cobble size : 700 mm, Max. SPT-N value : 300)
Pile：FSP Type Ⅳ, Pile Length = 12.5 m, Embedded depth = 8.5 m
Preaugering (Auger head : D540, triple blades)

Model	F111(Flywheel-type)	SCU-400M
Average installation rate	2.4 min/m	4.3 min/m
Average Daily Progress	6 sheet piles	3 sheet piles

Comparison of Press-in Time
・Time : Reduction by 44%
・Production :
Twice as many as conventional model

*The above test results do not guarantee the performance rate of this product.

GIKEN Construction Solutions Company
www.giken.com

CONTACT US

"SILENT PILER" is a registered trademark or trademark of GIKEN LTD. in the United States and other countries.
© 2022 GIKEN LTD. All Rights Reserved.